IFQ LOGGER 2

Logger for RAVEN-EYE® 2(+), BELUGA, BELUGA A/V or PHOENIX 2



The IFQ LOGGER 2 is a portable converter and data logger designed for use with Flow-Tronic flow sensors. It is equipped with one RS485 digital serial communication port for **RAVEN-EYE®, RAVEN-EYE® 2(+), BELUGA, BELUGA A/V or PHOENIX 2** sensors, along with a 4–20 mA input for external level measurement.

The IFQ LOGGER 2 with its robust design and versatile functionality, is ideally suited for **inflow and infiltration monitoring, capacity assessment, sewer overflow detection, and sewer studies**, delivering reliable data collection for demanding applications in wastewater and environmental monitoring.

Through direct USB-C communication, the IFQ LOGGER 2 allows quick and straightforward setup and configuration of the flow measurement system. It provides real-time measurements, including velocity distribution and signal analysis, while recorded data can be downloaded conveniently via the USB connection. A built-in local display with navigation using a magnet makes it easy to review the latest recorded values, display alarms, switch between data views, and access key functions such as data recovery in the event of SD card loss or corruption.

The device is built into a rugged **IP67 enclosure** designed to withstand harsh field conditions. Its connectors combine plastic bodies with stainless steel reinforcement, ensuring long-term durability while remaining corrosion free. Power is supplied by one or two 12 VDC – 12 Ah batteries, which are hot swappable thanks to easily accessible connectors that allow quick replacement without interrupting operation.

Technical Specifications

Sensor Interface

1x RS485 digital sensor interface for velocity sensor

Compatibles sensors:	RAVEN-EYE®, RAVEN-EYE® 2(+), BELUGA, BELUGA A/V, PHOENIX or PHOENIX 2

1x 4-20 mA analog input for level sensor

Compatibles sensors:	ULS-02, ULS-06, PLS-02, PLS-06 RLS-15, RLS-C21 or any other loop powered 4-20 mA level sensor with appropriate connector

Setup & Operation

Complete configuration using FUZION software for Windows through direct USB-C communication

Operation with magnet for wake-up, data recovery, alarm, totalizer reset, etc.

Available units:

Flow:	l/s, m^3/h, m^3/s, m^3/d, Ml/d, gpd, gpm, cfm, MGD
Velocity:	cm/s, m/s, fps
Level:	mm, cm, m, inch, feet
Total flow:	l, m^3, g, cf

Available languages: EN

Advanced features: Q/h curve

Display & LED

144x32 pixel black-on-green graphical display with wake-up function.
Two lines of text display: flow, velocity, level, total flow, alarms, time stamp and power supply
Internal battery status indication.
1 status indication LED.

Logger

External Memory	32 GB SD card (up to 250 years of data)
Internal Memory	32 MB internal backup memory (up to 4 months of data at one minute logging interval)
Real-time clock	Dedicated backup battery
Data format available	.tsv & .csv

Certification CE

FLOW-TRONIC

www.flow-tronic.com

Chemin des Tilleuls 32 | 4840 Welkenraedt | BELGIUM
Tel.: +32 (0)87 899 799 | E-mail: info@flow-tronic.com

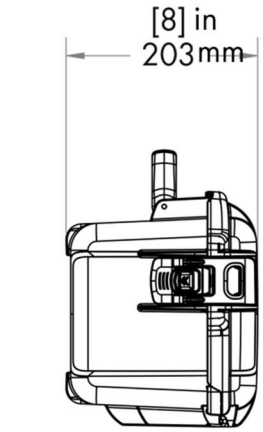

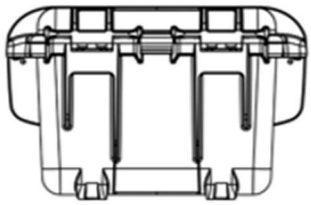

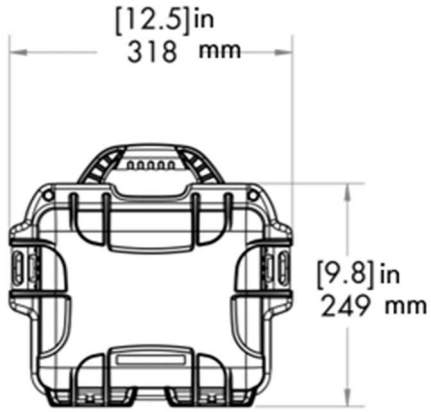

Technical Specifications

Power Supply

Battery	One or two 12 VDC 12 Ah lead-acid batteries Hot swapable batteries Autonomy of 3 months (5 min. interval)* Deep discharge protection (max 9.6 V)

Enclosure

Dimensions	249 mm L x 318 mm W x 203 mm D (9.8'' L x 12.5'' W x 8'' D)
Weight	9.8 kg (21.61 lb) with two batteries
Material	Impact-resistant polypropylene resin
Protection	IP67 (when closed)
Max. humidity	90% r.H. (non-condensing)
Connectors	Stainless steel reinforced plastic

Environmental Conditions

Operating temperature range	-20 to +60°C (-22 to +140°F)
Storage temperature range	0 to +45°C (-32 to +113°F)

FUZION software data display:

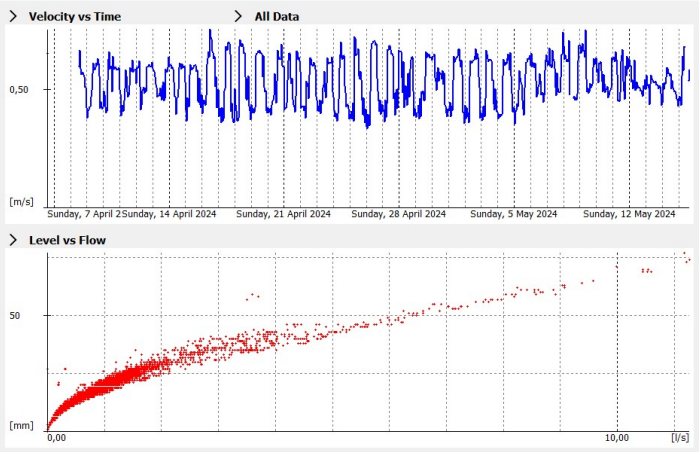

**Autonomy based on fully charged batteries and normal operating temperatures*

Specifications are subject to change without notice
Updated: September 2025

FLOW-TRONIC

www.flow-tronic.com

Chemin des Tilleuls 32 | 4840 Welkenraedt | BELGIUM
Tel.: +32 (0)87 899 799 | E-mail: info@flow-tronic.com